XL XL XL XL XL XL XL XL XL XL XL XL XL XL XL XL XL XL XL XL XL XL XL XL XL XL XL XL XL XL XL XL

PARTS LIST

PRICE .35

HOMELITE®

921

923

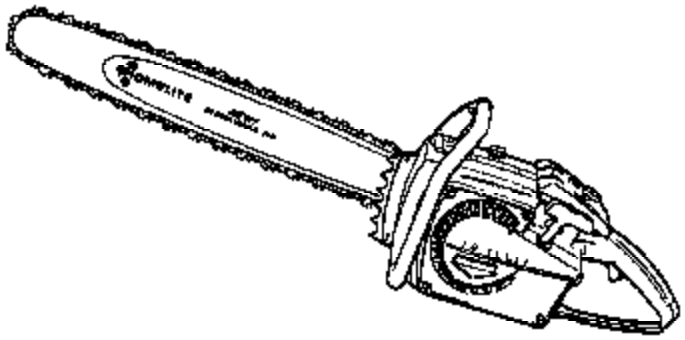

924

924W

923FP

CHAIN SAWS

PART NO. 24410-A

XL-923FP

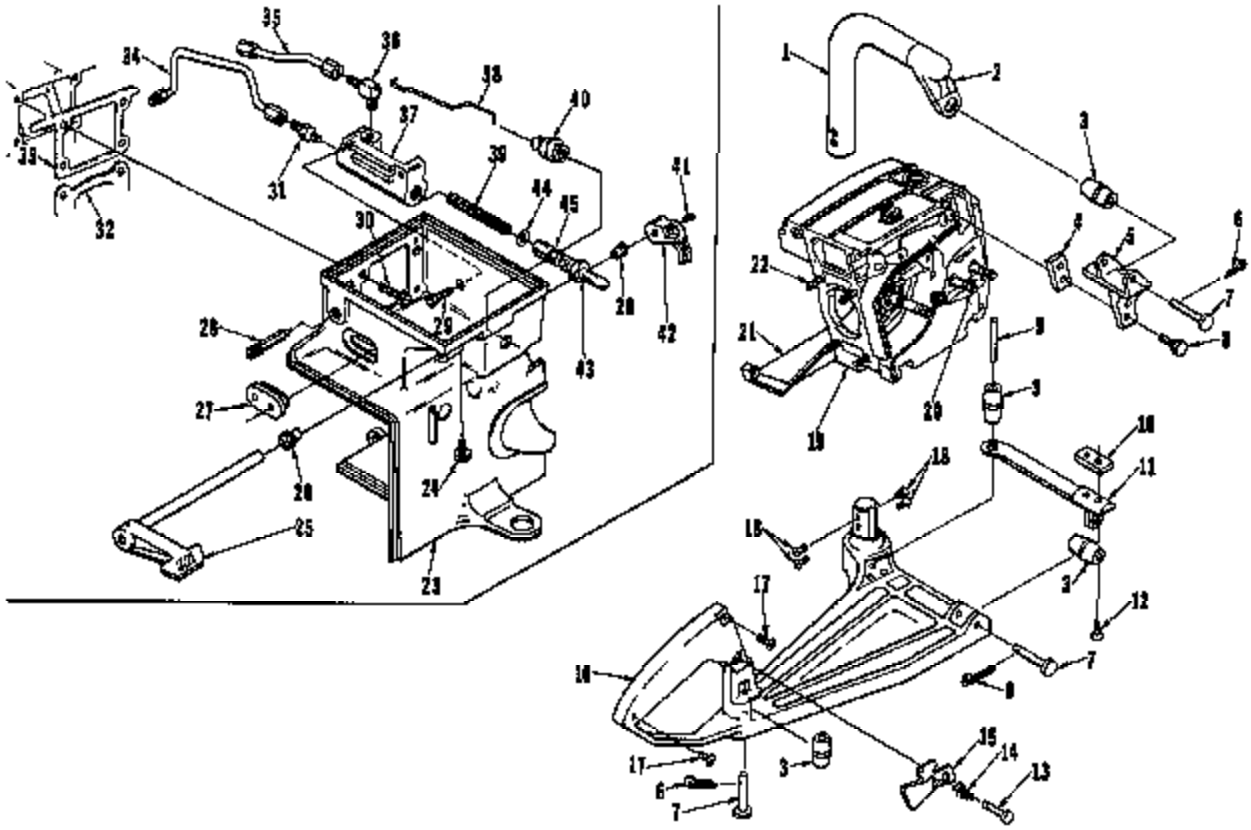

No.	Description	Part No.	Qty.
1	HANDLE BAR	A-67660-1B	1
	Includes:		
2	CONNECTOR-handle bar	A-63250	1
3	MOUNT-vibration isolator	67868	4
4	PLATE-handle bar bracket	65698	1
5	BRACKET-handle bar	67650-2	1
6	PIN-cotter	96317	3
7	PIN-clevis	67851-1	3
8	SCREW-hex, 12-24 x 3/4	80887	2
9	PIN-dowel	67653	1
10	PLATE-handle bar	65599	1
11	BRACKET-isolation mount	67646-2	1
12	SCREW-flat, 1/4-20 x 3/4	80053	2
13	PIN-throttle latch	65822	1
14	SPRING-throttle latch	65714	1
15	TRIGGER-throttle	67648-2	1
16	BASE-isolation mount	A-68067-A	1
	Includes:		
17	SCREW-pan, 8-32 x 1/2	80860	2
	BUSHING-nylon (not shown)	59064	1
	BUSHING-throttle latch (not shown)	67752	1
18	SCREW-flat, 12-24 x 1/2	82188	4
19	CRANKCASE & TANK	A-68845	1
	Includes:		
20	BOLT-guide bar	67158	2
	SCREW-fil, 8-32 x 5/8 (shown on Page 5)	82146	6
	SCREW-fil, 8-32 x 2-3/16 (shown on Page 5)	82155	8
21	COVER	67153-2	1
	SCREW-fil, 8-32 x 1-3/4 (shown on Page 5)	82147	1
	PIN-dowel (shown on Page 5)	63631	2
	GASKET-fuel tank (shown on Page 5)	67159	1
22	STUD	65871	4
	SEAL-(shown on Page 5)	68868-A	1
	SHIELD-sawdust (shown on Page 5)	A-64716	1
23	CARBURETOR CHAMBER	A-68846	1
24	Includes: BUMPER	59298	1
25	LEVER-oiler w/shaft	A-63827	1
26	BUSHING-nylon	68400	3
27	GROMMET-"Hi-Lo"	56858	1
28	SCREW-idle adjustment	63369-A	1
29	SCREW-hex, 8-32 x 1/2	80988	2
30	SCREW-hex, 12-24 x 5/8	80876	4
31	VALVE-check (outlet)	A-59466-A	1
	Includes:		
	SPRING (not shown)	58022	1
	BALL	25527	1
32	GASKET-cylinder	63778-1	1
33	GASKET-throttle handle	68778-B	1
34	LINE-oil (discharge)	A-63299	1
	Includes: SLEEVE (not shown)	25301	2
35	LINE-oil (intake)	A-63298	1
	Includes: SLEEVE (not shown)	25301	3
36	VALVE-check (inlet)	A-68432	1
	Includes: BALL	25527	1
37	BODY-oil pump	63343-2	1
38	ROD-throttle	67649	1
39	SPRING-compression	59293	1
40	BOOT-throttle rod	58348	1
41	SCREW-soc.set, 8-32 x 1/4	80989	1
42	ARM-oiler	63280-3A	1
43	PLUNGER-oil pump	A-57834-14	1
	Includes:		
44	"O" RING-shaft	69074	1
45	"O" RING-plunger	74368	1

XL-921 XL-923 XL-924 XL-924W XL-923FP

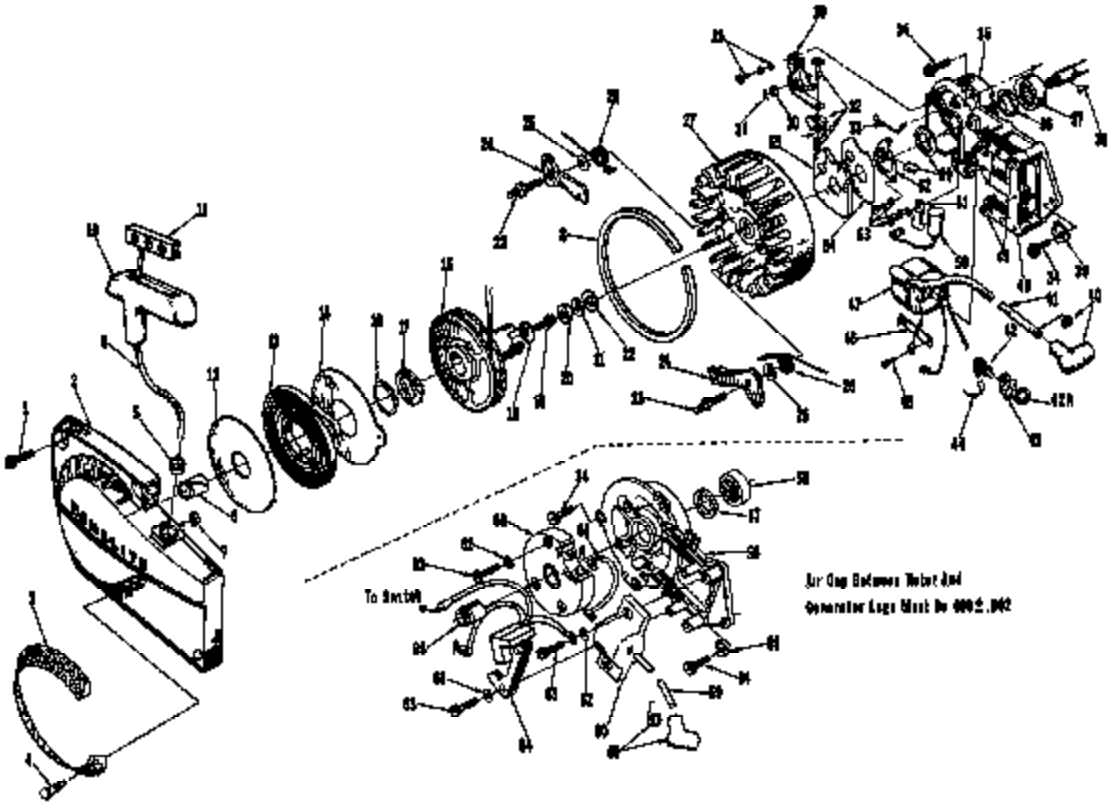

No.	Description	Part No.	921	923	924	924W	923FP	Qty.
1	SCREW-hex, 12-24 x 5/8	80676	x	x	x	x	x	4
2	HOUSING-fan	A-84604-B	x	x	x	x	x	1
	Includes:							
3	SCREEN-fan housing	A-84421	x	x	x	x	x	1
4	Includes: STUD	87181	x	x	x	x	x	11
5	BUSHING-starter rope	87177	x	x	x	x	x	1
6	BUSHING-starter post	84443	x	x	x	x	x	1
7	BUSHING-rewind spring	66820	x	x	x	x	x	1
8	RING-air flow	87409	x	x	x	x	x	1
9	ROPE-starting	58808	x	x	x	x	x	1
10	GRIP-starting rope	58916	x	x	x	x	x	1
11	INSERT-rope retaining	58847	x	x	x	x	x	1
12	SHIELD-spring (inner)	63566	x	x	x	x	x	1
13	SPRING-rewind	63288-A	x	x	x	x	x	1
14	SHIELD-spring (outer)	63565-A	x	x	x	x	x	1
15	PULLEY-rewind starter	A-84448	x	x	x	x	x	1
	Includes.							
16	BUSHING-spring lock	64400	x	x	x	x	x	1
17	LOCK-rewind spring	84049-A	x	x	x	x	x	1
18	WASHER-retaining	58763	x	x	x	x	x	1
19	SCREW-hex, 10-32 x 1/2	80648	x	x	x	x	x	1
20	NUT-hex, 3/8-24	81124	x	x	x	x	x	1
21	WASHER-lock, 3/8	83102	x	x	x	x	x	1
22	WASHER-flat, 3/8	84010-I	x	x	x	x	x	1
23	STUD-shoulder	58759-B	x	x	x	x	x	2
24	PAWL-starter	66766	x	x	x	x	x	2
25	WASHER	58861	x	x	x	x	x	2
26	SPRING-starter pawl	58738	x	x	x	x	x	2
27	ROTOR-magneto	63408	x	x			x	1
	ROTOR-magneto	67166			x	x		1
28	SCREW-contact plate	76421	x	x			x	1
29	POINTS-breaker	A-63831	x	x			x	1
	Includes.							
30	WASHER-point	28028	x	x			x	1
31	CLIP-post	38008	x	x			x	1
32	BLOCK-terminal	A-68834	x	x			x	1
33	SPRING-clip cover	78413	x	x			x	1
34	SCREW-hex, 1/4-20 x 5/8	80048	x	x	x	x	x	4
35	PLATE-magneto back	A-66027	x	x			x	1
	Includes:							
36	SEAL	58886-A	x	x			x	1
37	BEARING-roller	63195	x	x			x	1
38	KEY-woodruff	75073	x	x	x	x	x	1
39	WASHER-tab lock	67875-1	x	x	x	x	x	1
40	TERMINAL-spark plug	A-33056	x	x	x	x	x	1
41	LEAD-high tension	68632	x	x			x	1
42	SWITCH-toggle	A-57650-S	x	x	x	x	x	1
42A	Includes: NUT	72084-A1	x	x	x	x	x	1
43	PLATE-indicating "On-Off"	72086-A	x	x	x	x	x	1
44	LEAD-ground	A-59031	x	x			x	1
45	SCREW-ground	84090	x	x			x	1
46	CLIP-coil retaining	68726	x	x			x	1
47	COIL-ignition	63625	x	x			x	1
48	CORE-coil	63630	x	x			x	1
49	SCREW-coil core	84021	x	x			x	4
50	CONDENSER	63626	x	x			x	1
51	CLAMP-condenser	63627	x	x			x	1
52	RETAINER-felt	63628	x	x			x	1
53	SCREW-contact plate	66411	x	x			x	3
54	GASKET-breaker box cover	63316	x	x			x	1
55	COVER-breaker box	63317	x	x			x	1
56	PLATE-back	A-67818			x	x		1
	Includes.							
57	SEAL	58869-A			x	x		1
58	BEARING-roller	63195			x	x		1
59	LEAD-high tension	67166			x	x		1
60	COIL-transformer	67164			x	x		1
61	LEAD-transformer	67167			x	x		1
62	WASHER-lock, #8	89022			x	x		7
63	SCREW-pan, 8-32 x 3/4	82178			x	x		7
64	COIL-core and generator	67163			x	x		1
65	CAP-dust	64002			x	x		1
66	MODULE-ignition	67162			x	x		1

XL-921 XL-923 XL-924 XL-924W XL-923FP

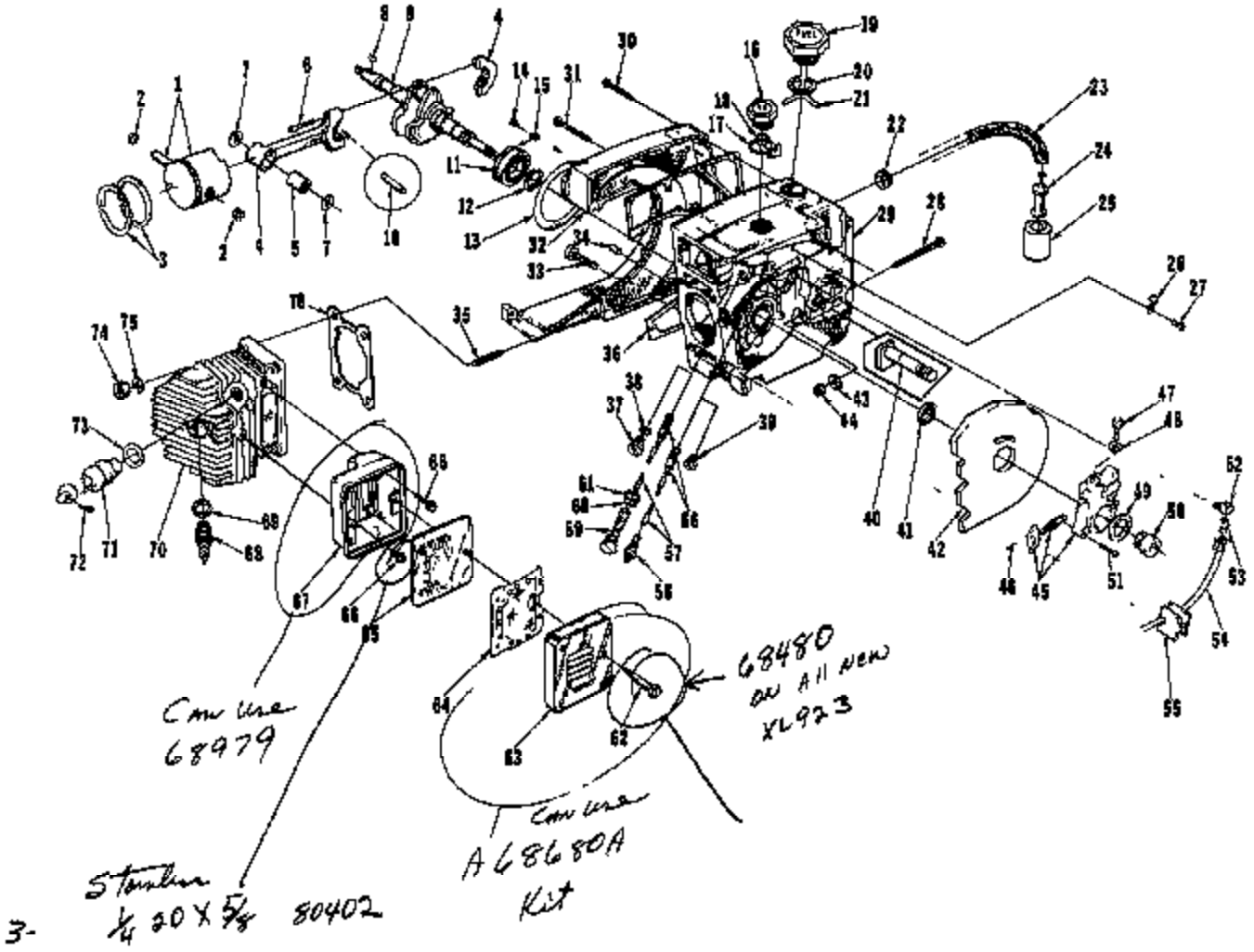

3-

XL-921 XL-923 XL-924 XL-924W XL-923FP

No.	Description	Part No.	921	923	924	924W	923FP	Qty.
1	PISTON & PIN	A-68035	x					1
	Includes:							
2	RING-piston pin retaining	64742	x					2
3	PISTON RING	55038	x					2
1	PISTON & PIN	A-67389-1		x	x	x	x	1
	Includes:							
2	RING-piston pin retaining	64742		x	x	x	x	2
3	PISTON RING	68249		x	x	x	x	2
4	ROD-connecting	A-68008	x	x	x	x	x	1
	Includes:							
5	BEARING-needle	68351	x	x	x	x	x	1
6	SCREW-spec, 8-32 x 9/16	80805	x	x	x	x	x	2
7	WASHER-thrust	68010	x	x	x	x	x	2
8	KEY-woodruff	75076	x	x	x	x	x	1
9	CRANKSHAFT	67168	x					1
	CRANKSHAFT	67168-1		x	x	x	x	1
10	BEARING-needle (28 rollers)	A-64821	x	x	x	x	x	1
11	BEARING-ball	58190-B	x	x	x	x	x	1
12	RING-retaining	58319-A	x	x	x	x	x	1
13	"O" RING	67559	x	x	x	x	x	1
14	SCREW-bearing retaining	58704	x	x	x	x	x	3
15	WASHER-lock	58706	x	x	x	x	x	2
16	CAP-oil	A-66284-A	x	x	x	x	x	1
	Includes:							
17	"O" RING	66138	x	x	x	x	x	1
	VALVE-check (not shown)	63718	x	x	x	x	x	1
18	RETAINER	68760		x	x	x	x	1
19	CAP-fuel	A-62823-A	x	x	x	x	x	1
	Includes:							
	VALVE-check (not shown)	63718	x	x	x	x	x	1
20	GASKET	58927	x	x	x	x	x	1
21	RETAINER	68761		x	x	x	x	1
22	GROMMET	68048	x	x	x	x	x	1
23	LINE-fuel flexible (Note 1)	68442	x	x	x	x	x	1
24	FILTER-fuel	A-59251	x	x	x	x	x	1
25	Includes: FILTER-felt	59253-1	x	x	x	x	x	1
26	CLAMP-fuel line	65587-1	x	x	x	x	x	1
27	SCREW-pan, 8-32 x 5/16	80805	x	x	x	x	x	1
28	SCREW-guide bar adjusting	63367	x	x	x	x	x	1
29	CRANKCASE & TANK (See Page 2)	A-68845					x	1
	CRANKCASE & TANK	A-68029	x	x	x	x		1
	Includes:							
	GASKET-check valve (not shown)	65144	x	x	x	x		1
	CAP-check valve (not shown)	65143	x	x	x	x		1
30	SCREW-fil, 8-32 x 5/8	82146	x	x	x	x	x	8
31	SCREW-fil, 8-32 x 2-3/16	82155	x	x	x	x	x	8
32	COVER	67153-2	x	x	x	x	x	1
33	SCREW-fil, 8-32 x 1-3/4	82147	x	x	x	x	x	1
34	PIN-dowel	63821	x	x	x	x	x	2
35	STUD	55371	x	x	x	x	x	4
36	GASKET-fuel tank	67159	x	x	x	x	x	1
37	CAP	63115	x	x	x	x		1
38	WASHER	58138	x	x	x	x		1
39	PLUG-pipe	38037	x	x	x	x		1
40	BOLT-guide bar	67158	x	x	x	x	x	2
41	SEAL	68688-A	x	x	x	x	x	1
42	SHIELD-sawdust	A-64715	x	x	x	x	x	1
43	PIN-guide bar adjusting	67588-1A	x	x	x	x	x	1
44	NUT-flexloc, 1/4-20	81108	x	x	x	x	x	1

No.	Description	Part No.	921	923	924	924W	923FP	Qty.
45	PUMP-automatic oil	A-68285		x	x	x	x	1
	Includes:							
46	SCREW-pan, 4-40 x 1/4	80219		x	x	x	x	2
47	SCREW-cam	84108-A		x	x	x	x	1
48	GASKET-cam screw	59736		x	x	x	x	1
49	SEAL-felt	58926		x	x	x	x	1
50	WORM-gear	58675		x	x	x	x	1
51	SCREW-fil, 8-32 x 3/4	80248		x	x	x	x	3
52	CONNECTOR-elbow	81734	x	x	x	x		1
53	FITTING-tube	68698	x	x	x	x		1
54	LINE-oil	A-65682	x	x	x	x		1
55	GROMMET-oil line	65857	x	x	x	x	x	1
56	FILTER-oil	A-64293	x					1
	FILTER-oil	A-64293		x	x	x	x	2
57	LINE-oil pick-up	63605	x					1
	LINE-oil pick-up	59000		x	x	x	x	2
58	CONNECTOR-oil filter	66695	x	x	x	x		1
	CONNECTOR-oil filter	59937					x	1
59	TUBE-oil line	63452-A		x	x	x	x	1
60	"O" RING	58406		x	x	x	x	1
61	GASKET-oil line tube	63751		x	x	x	x	1
62	SCREW-shoulder (Note 4)	63865-A	x	x	x	‡	x	3
	STUD-muffler (Note 3)	58874				x		3
63	CAP-muffler (Notes 2 & 4) 68980	63520-3	x	x	x	‡	x	1
	CAP-muffler (Note 3)	A-68811-1				x		1
	NUT-hex, 10-32 flex (not shown) Note 3	81108-2				x		3
64	ARRESTOR-spark	A-63540-B	‡	‡	‡	x	‡	1
65	BAFFLE-muffler (Note 2)	63521-A	x	x	x		x	1
	BAFFLE-muffler (924W only) 10 oz	68633				x		1
66	SCREW-hex, 12-24 x 5/8 F0402	80976	x	x	x	x	x	3
67	BODY-muffler (Note 2) 68979	A-63535-2	x	x	x	x	x	1
68	SPARK PLUG	63547-5	x	x	x	x	x	1
69	Includes: GASKET	23038	x	x	x	x	x	1
70	CYLINDER- (Note 3) 68980							
	(no decompression valve) ~~A-68818-1~~					x		1
	CYLINDER-2" bore	A-68284	x					1
	CYLINDER-2-1/16" bore (Note 4) ~~A-68850~~ 68674			x	x	x	x	1
	Includes:							
71	VALVE-decompression	A-68028		x	x	x	x	1
72	Includes: PIN-cotter	58328		x	x	x	x	1
73	WASHER-copper	67323		x	x	x	x	1
74	NUT-hex, 1/4-28	81065-2	x	x	x	x	x	4
75	WASHER-lock, 1/4	58008	x	x	x	x	x	4
76	GASKET-cylinder	63778-1	x	x	x	x	x	1

‡ Optional

Note 1 - Units built with 3 piece fuel line will require A-68440 Fuel Line Kit, which includes 68048 Grommet and 68445 Bushing.

Note 2 - For units built with Reed Mufflers the following parts are still available: 67533-A Baffle, 68208 Stud, 67394 Reed and 67413-A Stop.

Note 3 - For XL-924W units above S/N 11461460.

Note 4 - For XL-924W units below S/N 11461460.

XL-921 XL-923 XL-924 XL-924W XL-923FP

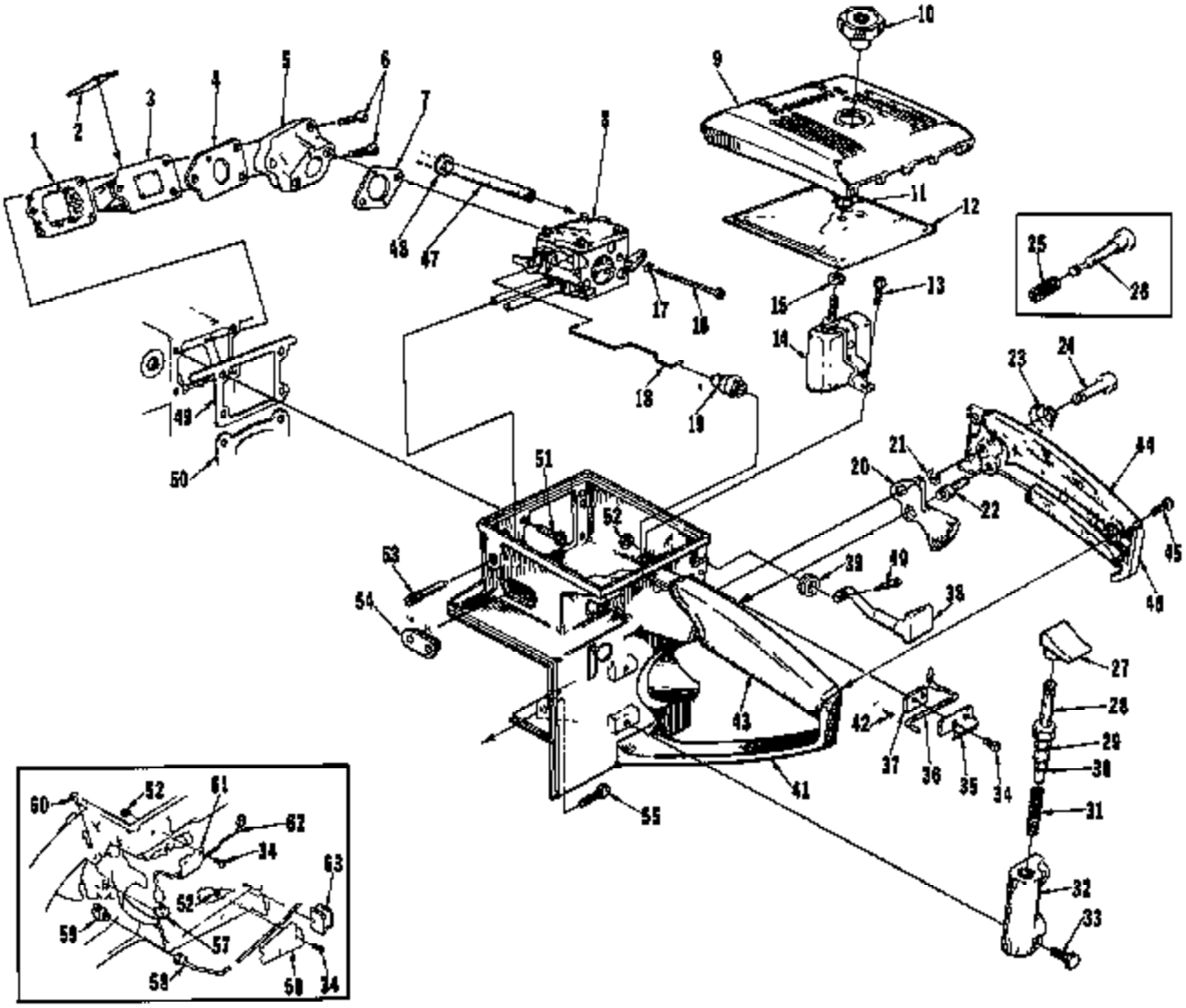

XL-921 XL-923 XL-924 XL-924W XL-923FP

No.	Description	Part No.	921	923	924	924W	923FP	Qty.
1	RETAINER-reed valve	63370-A	x	x	x	x	x	1
2	VALVE-reed	63366-A	x	x	x	x	x	4
3	SEAT-reed	63371-B	x	x	x	x	x	1
4	GASKET-reed valve seat	65483	x	x	x	x	x	1
5	MANIFOLD-intake	A-67460-1	x	x	x	x	x	1
6	SCREW-pan, 8-32 x 1-1/2	82396	x	x	x	x	x	3
7	GASKET-carburetor	67740	x	x	x	x	x	1
8	CARBURETOR-HS-10 HB	A-68251-A				x		1
	CARBURETOR-HS-92D	A-67887-C	x	x	x		x	1
9	COVER-air filter element	63634-1	x	x	x	x	x	1
10	NUT-cover mounting	A-67614	x	x	x	x	x	1
11	RING-bearing retaining	88319-A	x	x	x	x	x	1
12	FILTER ELEMENT-air	61341	x	x	x	x	x	1
13	SCREW-hex, 12-24 x 1/2	80821	x	x	x	x	x	1
14	DEFLECTOR-air w/bracket	A-67101	x	x	x	x	x	1
	Includes							
15	GASKET-mounting nut	68342-1	x	x	x	x	x	1
16	SCREW-hex, 10-32 x 1-7/8	82199	x	x	x	x	x	2
17	WASHER-lock, #10	83049	x	x	x	x	x	2
18	ROD-throttle	63266-A	x	x	x	x		1
	ROD-throttle	67649					x	1
19	BOOT-throttle rod	58348	x	x	x	x	x	1
20	TRIGGER-throttle	66743	x	x	x	x		1
21	RING-retaining (Note 3)	58409	x			x		1
22	PIN-throttle latch adjusting	66719	x	x	x	x		1
23	SPRING-throttle latch (Note 2)	66714		x	x	x	x	1
24	PIN-throttle latch (Note 2)	65882		x	x	x	x	1
25	SPRING-throttle latch (Note 3)	58405	x			x		1
26	PIN-throttle latch (Note 3)	58824-4	x			x		1
27	BUTTON-oil pump plunger	63622	x	x	x	x		1
28	PLUNGER-oil pump	A-57834-16	x	x	x	x		1
	PLUNGER-oil pump	A-57834-14					x	1
	Includes							
29	"O" RING-shaft	58094	x	x	x	x	x	1
30	"O" RING-plunger	74389	x	x	x	x	x	1
31	SPRING-compression	59283	x	x	x	x	x	1
32	BODY-oil pump	63343-5	x	x	x	x		1
	BODY-oil pump	63343-2					x	1
33	SCREW-hex, 8-32 x 9/8	80508	x	x	x	x		2
	SCREW-hex, 8-32 x 1/2	80993					x	2
34	SCREW-pan, 6-32 x 3/8	80571	x			x		4
	SCREW-pan, 8-32 x 3/8	80571		x	x			8
	SCREW-pan, 8-32 x 3/8	80571					x	2

No.	Description	Part No.	921	923	924	924W	923FP	Qty.
35	CLAMP-lever	60821-1		x	x		x	1
36	LEVER-poppet valve	60010		x	x			1
37	PLUMP-lever	65028-1		x	x		x	1
38	ROD-choke	A-68429	x	x	x	x	x	1
39	Includes GROMMET	64962	x	x	x	x	x	1
40	PIN-cotter	85124	x	x	x	x	x	1
41	HANDLE-throttle	A-68025-B	x	x	x	x		1
	Includes							
42	PLUG-accordion	65689	x	x	x	x		2
43	GRIP-throttle handle	68767	x	x	x	x		1
44	GRIP-throttle handle cover	68768	x	x	x	x		1
45	SCREW-pan, 8-32 x 1/2	80060	x	x	x	x		2
46	COVER-throttle handle (Note 1)	A-68800	x	x	x	x		1
	Includes.							
	BUSHING-nylon (not shown)	59064	x	x	x	x		1
	BUSHING-throttle latch (not shown) (Note 3)	65873	x	x	x	x		1
47	LINE-fuel (Note 1)	68442	x	x	x	x	x	1
48	GROMMET	68016	x	x	x	x	x	1
49	GASKET-throttle handle	63778-B	x	x	x	x	x	1
50	GASKET-cylinder	63778-1	x	x	x	x	x	1
51	SCREW-hex, 12-24 x 5/8	80670	x	x	x	x	x	4
52	NUT-lock, 6-32	81126	x			x		4
	NUT-lock, 6-32	81126		x	x			6
	NUT-lock, 6-32	81126					x	3
53	SCREW-idle adjustment	63368-A	x	x	x	x	x	1
54	GROMMET-"Hi-Lo"	58858	x	x	x	x	x	1
55	SCREW-hex, 12-24 x 7/8	80991	x	x	x	x	x	1
56	CLAMP-oil line	65513-1	x	x	x	x		1
57	VALVE-check	A-68302	x	x	x	x		1
	Includes BALL	25527	x	x	x	x		1
58	LINE-oil	A-63682	x	x	x	x		1
	LINE-oil	A-63289					x	1
	Includes. SLEEVE	25301					x	2
59	VALVE-check	A-66516	x	x	x	x		1
	Includes SPRING	58022	x	x	x	x		1
	BALL	25527	x	x	x	x		1
60	SCREW-fil, 8-32 x 5/8	80023-2	x	x	x	x		1
61	CLAMP-oil line	65660-1	x	x	x	x		1
62	LINE-oil	A-65705	x	x	x	x		1
63	GROMMET-oil line	65457	x	x	x	x	x	1

Note 1 - For units without Rubber Grips use A-68832-A Cover.

Note 2 - For XL-924W units below S/N 11461450.

Note 3 - For XL-924W units above S/N 11461450.

XL-921 XL-923 XL-924 XL-924W XL-923FP

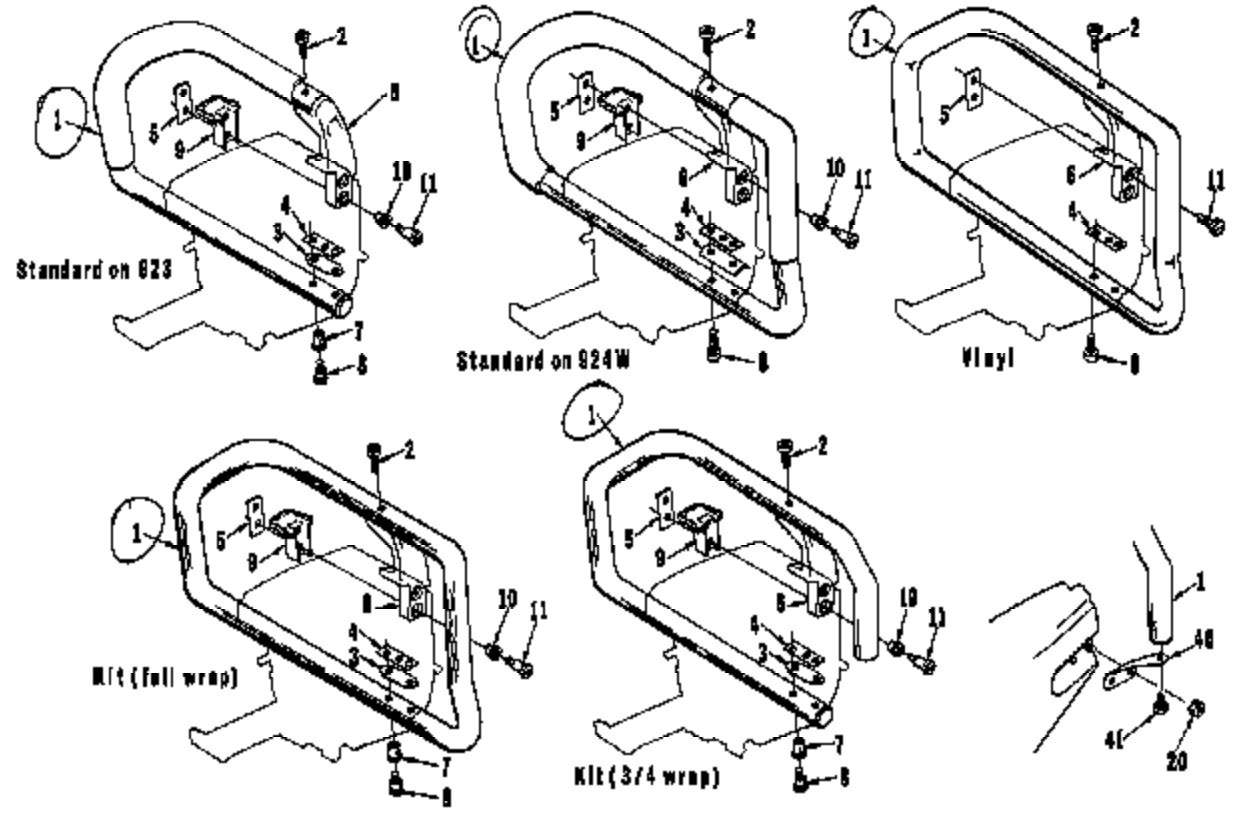

(1) See Memo 806 CS

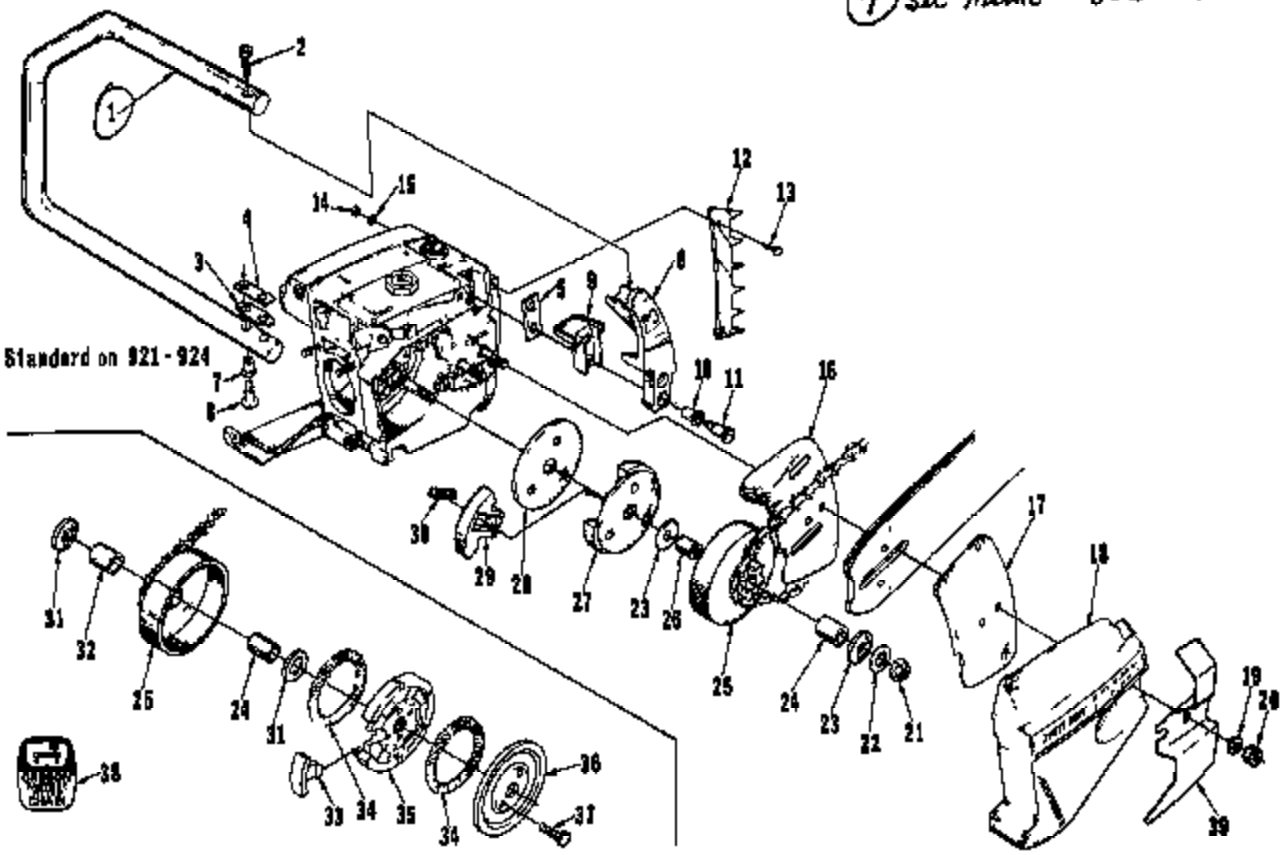

XL-921 XL-923 XL-924 XL-924W XL-923FP

No.	Description	Part No.	921	923	924	924W	923FP	Qty.
	Standard on XL-921 and XL-924 (Note 4)							
1	HANDLE BAR-flush (vinyl coated)	A-65860-1	x	‡	x			1
2	SCREW-soc., 1/4-20 x 1	80428	x	x	x			1
3	SPACER-handle bar	66542	x	‡	x			1
4	PLATE-handle bar	65599	x	x	x			1
5	PLATE-handle bar bracket	65598	x	x	x			1
6	BRACKET-handle bar	65607-3	x	‡	x			1
7	GROMMET-handle bar	65518	x	x	x			2
8	SCREW-shoulder	65520	x	x	x			2
9	MOUNT-shock	65509	x	x	x			1
10	GROMMET	65519	x	x	x			2
11	SCREW-shoulder	65521	x	x	x			2
12	KIT-spiked bumper	A-68769				x		1
	KIT-spiked bumper	A-63720	x	x	x		x	1
	includes:							
13	SCREW-hex, 12-24 x 3/4	80867	x	x	x	x	x	2
14	NUT-12-24	81088	x	x	x	x	x	2
15	WASHER-lock, #12	83088	x	x	x	x	x	2
16	PLATE-guide bar (inner)	67160	x	x	x	x	x	1
17	PLATE-guide bar (outer)	67161	x	x	x	x	x	1
18	COVER-drivecase	67156-3	x	x	x	x	x	1
19	WASHER-flat, 5/16	84032					x	2
20	NUT-hex, 3/8-16	81089-2	x	x	x	x		2
	NUT-hex, 5/16-18	81196					x	2
21	NUT-flexlock, 3/8-24	81192	x					1
22	WASHER-flat, 3/8	84010-1	x					1
23	WASHER-thrust (Note 1)	68698	x					2
24	BEARING-roller	84124	x	x	x	x	x	1
25	DRUM & HUB- rim type	A-85989	x					1
	DRUM & HUB- rim type	A-85990		x	x	x		1
	SPROCKET-3/8 pitch, 7 tooth (rim type)	OM-88210	x	x	x	x		1
	.404 pitch, 7 tooth (rim type)	OM-10513	‡	‡	‡	‡		1
	SPROCKET & DRUM 3/8 pitch, 8 tooth	A-85886	‡	‡	‡	‡		1
	SPROCKET & DRUM- .404 pitch, 7 tooth	A-85888	‡	‡	‡	‡		1
	SPROCKET & DRUM .404 pitch, 8 tooth	A-85887	‡	‡	‡	‡		1
	SPROCKET & DRUM 3/8 pitch, 7 tooth	A-85884	‡	‡	‡	‡		1
	SPROCKET & DRUM .404 pitch, 7 tooth	A-85727					‡	1
	SPROCKET & DRUM .404 pitch, 8 tooth	A-85728					‡	1
	SPROCKET & DRUM 3/8 pitch, 7 tooth	A-85731					‡	1
	SPROCKET & DRUM 3/8 pitch, 8 tooth	A-85732					x	1
26	RACE-inner	80746	x					1
27	PLATE-clutch	83063-1	x					1
28	COVER-clutch	83051	x					1
29	SHOE-clutch	84569	x					3
30	SPRING-clutch	85842	x					3
31	WASHER-thrust (Note 2)	83468		x	x	x		2
	WASHER-thrust	83462					x	1
	WASHER-thrust	83463					x	1
32	RACE-inner	84129		x	x	x	x	1
33	SHOE-clutch	87896-1		x	x	x	x	6
34	SPRING-clutch	87441		x	x	x	x	2
35	SPIDER-clutch	85723-2		x	x	x	x	1
36	COVER-clutch	68701-1		x	x	x	x	1
37	SCREW-hex, 10-32 x 1/2	80381-1		x	x	x	x	3
38	LABEL-chain (Oregon)	63118	x	x	x	x	x	1
39	GUARD-chain	68078-1	‡	‡	‡	x		1
40	BRACE-handle bar	83660	‡	‡	‡	‡		1
41	SCREW-hex, 12-24 x 3/4	80867	‡	‡	‡	‡		1

No.	Description	Part No.	921	923	924	924W	923FP	Qty.
	Standard on XL-923							
1	HANDLE BAR-flush (rubber covered) (Note 3)	A-68782-2 (469034-1)	‡	x	‡	‡		1
2	SCREW-soc., 1/4-20 x 1	80428	x	x	x	x		1
3	SPACER-handle bar	66765	‡	x	‡	‡		1
4	PLATE-handle bar	65599	x	x	x	x		1
5	PLATE-handle bar bracket	65598	x	x	x	x		1
6	BRACKET-handle bar	68766-2	‡	x	‡	‡		1
7	GROMMET-handle bar	65518	x	x	x	‡		2
8	SCREW-shoulder	65520	x	x	x	‡		2
9	MOUNT-shock	65509	x	x	x	x		1
10	GROMMET	65519	x	x	x	x		2
11	SCREW-shoulder	65521	x	x	x	x		2
	Standard on XL-924W							
*1	HANDLE BAR-full wrap (rubber covered) (Note 6)	A-68899-1	‡	‡	‡	x		1
2	SCREW-soc., 1/4-20 x 1	80428	x	x	x	x		1
*3	SPACER-handle bar	68898-1	‡	‡	‡	x		1
4	PLATE-handle bar	65599	x	x	x	x		1
5	PLATE-handle bar bracket	65598	x	x	x	x		1
6	BRACKET-handle bar	68766-4	‡	‡	‡	x		1
6	SCREW-soc., 1/4-20 x 1-1/8	80854	‡	‡	‡	x		2
9	MOUNT-shock	65509	x	x	x	x		1
10	GROMMET	65519	x	x	x	x		2
11	SCREW-shoulder	65521	x	x	x	x		2
39	GUARD-chain	68078-1	‡	‡	‡	x		1
1	HANDLE BAR-wrap around (vinyl coated) (Note 6)	A-67626-3		‡	‡	‡		1
2	SCREW-soc, 1/4-20 x 1	80428		x	x	x		1
4	PLATE-handle bar	65599		x	x	x		1
5	PLATE-handle bar bracket	65598		x	x	x		1
6	BRACKET-handle bar	68011-8		‡	‡	‡		1
8	SCREW-soc, 1/4-20 x 1	80428		‡	‡	‡		2
11	SCREW-hex, 12-24 x 3/4	80867		‡	‡	‡		2
39	GUARD-chain	68078-1		‡	‡	x		1
	KIT-handle bar (full wrap around) (Includes index # 1, 6 & 39)	A-65894	‡	‡	‡			1
1	HANDLE BAR	A-65814-2	‡	‡	‡			1
2	SCREW-soc., 1/4-20 x 1	80428	x	x	x			1
3	SPACER-handle bar	66542	x	‡	x			1
4	PLATE-handle bar	65599	x	x	x			1
5	PLATE-handle bar bracket	65598	x	x	x			1
6	BRACKET-handle bar	65607-5	‡	‡	‡			1
7	GROMMET-handle bar	65518	x	x	x			3
8	SCREW-shoulder	65520	x	x	x			2
9	MOUNT-shock	65509	x	x	x			1
10	GROMMET	65519	x	x	x			2
11	SCREW-shoulder	65521	x	x	x			2
39	GUARD-chain	64867-1	‡	‡	‡			1
	KIT-handle bar (3/4 wrap around) (Includes index # 1, 6, 40 & 41)	A-65902	‡	‡	‡	‡		1
1	HANDLE BAR	A-65900	‡	‡	‡	‡		1
2	SCREW-1/4-20 x 1	80428	x	x	x	x		1
3	SPACER-handle bar	66542	x	‡	x	‡		1
4	PLATE-handle bar	65599	x	x	x	x		1
5	PLATE-handle bar bracket	65598	x	x	x	x		1
6	BRACKET-handle bar	65607-5	‡	‡	‡	‡		1
7	GROMMET-handle bar	65518	x	x	x	‡		2
8	SCREW-shoulder	65520	x	x	x	‡		2
9	MOUNT-shock	65509	x	x	x	x		1
10	GROMMET	65519	x	x	x	x		2
11	SCREW-shoulder	65521	x	x	x	x		2
40	BRACE-handle bar	83660	‡	‡	‡	‡		1
41	SCREW-hex, 12-24 x 3/4	80867	‡	‡	‡	‡		1

Handle Bars must be used in groups as indicated above.

Note 1 - When using optional Sprocket & Drums, you must use one # 68828 Thrust Washer (outer).

Note 2 - When using optional Sprocket & Drums, you must use one # 83463 Thrust Washer (inner).

Note 3 - Units above S/N 3436418

Note 4 - XL-923 units below S/N 3436419

Note 5 - XL-924W units above S/N 11461450

Note 6 - XL-924W units below S/N 11461450

‡ Optional * Denotes new parts

XL-921 XL-923 XL-924 XL-924W XL-923FP

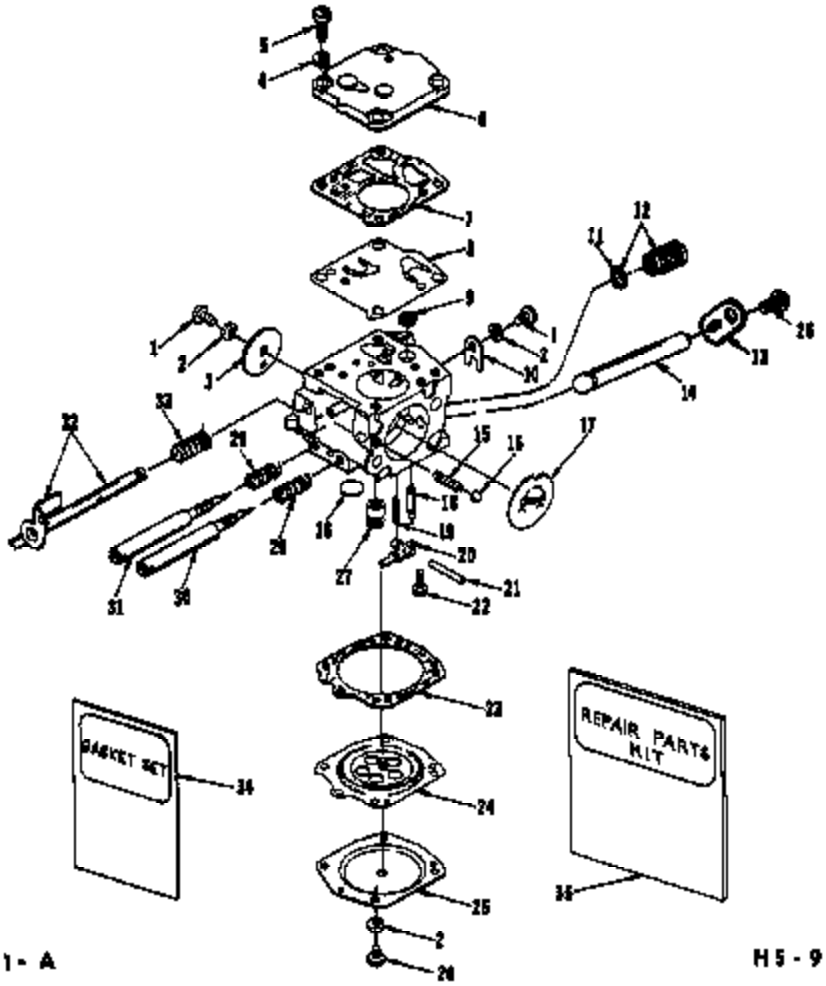

924W only

H5-103B A 68251-A

H5-92D A 67887-C

No.	Description	Part No.	Qty.
1	SCREW-rd., 4-40 x 3/16	†80264	2
2	WASHER-lock, #4	†83008-1	6
3	SHUTTER-throttle	67994	1
4	WASHER-lock, #6	83024	4
5	SCREW-fil, 6-32 x 3/8	80275	4
6	COVER-fuel pump diaphragm	58975	1
7	GASKET- pump diaphragm	58981	1
8	DIAPHRAGM-fuel pump	†58980-R	1
9	SCREEN-fuel inlet	†58974	1
10	CLIP-throttle shaft retaining	58982	1
11	GASKET	74060	1
	GASKET- (924W only)	55944	1
12	VALVE-governor	A-65601	1
	PLUG-screw (924W only)	68297	1
13	LEVER-choke	68997	1
14	SHAFT-choke	65799	1
15	SPRING-choke friction	73264	1
16	BALL-choke friction	25627	2
17	SHUTTER-choke	58984	1

† Included in Repair Kit

No.	Description	Part No.	Qty.
18	NEEDLE-inlet	†59717	1
19	SPRING-control lever	†55759	1
20	LEVER-inlet control	†59716	1
21	PIN-control lever fulcrum	†58977	1
22	SCREW-oval, 4-40 x 1/4	†65798	1
23	GASKET-main diaphragm	58978	1
24	DIAPHRAGM-main control	†58988	1
25	COVER-main diaphragm	58979	1
26	SCREW-rd., 4-40 x 1/4	80591	5
27	VALVE-check (See Note)	68284	1
28	PLUG-extension (large)	†58991	1
29	SPRING-adjustment needle	†73075	2
30	SCREW-main adjustment	†63676	1
31	SCREW-idle adjustment	†63677	1
32	SHAFT-throttle w/lever	A-67995	1
33	SPRING-throttle opening	†59460	1
34	GASKET-set	67866	1
35	REPAIR KIT	67870	1

Note - 68284 Check Valve can be used in place of 54444 Check Valve for carburetors that are hard starting.

XL-921 XL-923 XL-924 XL-924W XL-923FP

Tools		921	923	924	924W	923FP
23846-2	ANVIL-bearing remover (backplate)	x	x	x	x	x
23846-1	ANVIL-crankshaft installation	x	x	x	x	x
24304	BIT-pozidriv #2	x	x	x	x	x
23136-2	BODY-assembling fixture	x				
22820-3	COLLAR-bearing assembling	x				
22820-4	COLLAR-bearing installation		x	x	x	x
24230	DRIVER-hand pozidriv	x	x	x	x	x
A-23137	JACKSCREW (crankshaft)	x				
A-23966	JACKSCREW (crankshaft)		x	x	x	x
A-23962	JACKSCREW-bearing remover (backplate)	x	x	x	x	x
24006-1	PLATE-shaft aligning	x	x	x	x	x
23956	PLUG-bearing and seal installation (backplate)	x	x	x	x	x
23420	PLUG-bearing installation		x	x	x	x
23955	PLUG-bearing installation (conn. rod)	x	x	x	x	x
24302	PLUG-seal installation (backplate)			x	x	
23957	PLUG-seal installation (crankcase)	x	x	x	x	x
A-23960	PULLER-rotor	x	x	x	x	x
24306	SHIM- (black) air gap			x	x	
23987	SHIM-magneto air gap	x	x			x
23136-1	SLEEVE-bearing and shaft installation		x	x	x	x
23972	SLEEVE-seal installation (crankcase)	x	x	x	x	x
23759	SLEEVE-seal protecting (crankcase)	x				
23971	SLEEVE-seal protecting (crankcase)		x	x	x	x
24094	SPARK PLUG-removal				x	
A-22808	WRENCH-combination				x	
A-23937-B	WRENCH-combination	x	x	x		x
23528	WRENCH-socket screw (conn. rod)	x	x	x	x	x
A-23934	WRENCH-spanner (clutch)	x				
A-23696-A	WRENCH-spanner		x	x	x	x

Accessories

A-24279	KIT-fastening parts
A-24270	KIT-filter
A-24413	KIT-guide bar plate
A-24274	KIT-ignition (XL-921, XL-923)
23488-B	KIT-Loctite
A-24266	KIT-starting rope
A-68079	KIT-West Coast Conversion (XL-923, XL-924)
57084-1	REEL-250 ft., Starting Rope

Paint

22772	SPRAY CAN-black
24453	SPRAY CAN-blue "70"
23475	SPRAY CAN-red

Part No.	Description	Qty.
DM 10613	Sprocket	1
83772	Spray Can-black	1
A-83804	Wrench-comb.	1
83380-3	Collar-bearing	1
83380-4	Collar-bearing	1
83338-1	Sleeve-bearing	1
83135-2	Sleeve	1
A-83737	Jackscrew	1
83420	Plug-bearing	1
21476	Spray Can-red	1
23688-B	Kit-Loctite	1
23638	Wrench	1
A-23696-A	Wrench-spanner	1
23759	Sleeve-crankcase	1
23846-1	Anvil-crankshaft	1
23848-3	Anvil-bearing	1
A-83934	Wrench-spanner	1
A-83937-B	Wrench-comb.	1
23365	Plug-bearing	1
23868	Plug-bearing & seal	1
24007	Plug-seal	1
A-23050	Puller-rotor	1
A-23961	Jackscrew	1
A-23964	Jackscrew	1
23971	Sleeve-crankcase	1
23972	Sleeve-crankcase	1
23987	Shim-magnets	1
84006-1	Plate-shaft aligning	1
84094	Spark Plug-removal	1
24330	Driver-pawdrive	1
A-24370	Kit-starter rope	1
A-84370	Kit-filter	1
A-84374	Kit-ignition	1
A-84378	Kit-fastening parts	1
84383	Plug-seal	1
84384	Bit-pozidriv #8	1
84388	Shim-air gap	1
A-84413	Kit-guide bar plate	1
84453	Spray Can-blue	1
84038	Gasket	1
84301	Sleeve	2
84527	Ball-choke friction	8
84008	Clip-post	1
84098	Washer-point	1
84007	Plug-pipe	1
31734	Connector-elbow	1
A-83050	Terminal	1
84039	Piston Ring	2
84344	Gasket	1
84411	Screw-contact plate	3
84758	Spring-control lever	1
84871	Stud	4
68298	Bumper	1
37084-1	Rod-starting rope	
A-67850-8	Switch-toggle	1
A-67884-14	Plunger-oil pump	1
A-67884-16	Plunger-oil pump	1
68138	Washer	1
68190-8	Bearing-ball	1
68810-A	Ring-retaining	8
68243	Boot-throttle rod	1
68882-1	Gasket	1
84405	Spring	1
84406	"O" Ring	1
84409	Ring-retaining	1
83888-A	Seal	1
68751-1	Cover-clutch	1
68788	Pawl-starter	2
68787-B	Stud-shoulder	2
68788	Spring-starter pawl	2
68793	Washer-retaining	1
68808	Rope-starting	1
68833	Washer-thrust	2
68847	Insert	1
68851	Washer	2
68868	Grommet-hi-low	1
68913	Crip-starting rope	1
83884-4	Pin-throttle latch	1
68927	Gasket	1
A-68934	Block-terminal	1
68894	Screen	1
68875	Cover	1
68977	Pin-fulcrum	1
68918	Gasket-main dia.	1
68919	Cover-carb dia.	1
68880-8	Diaphragm	1
68881	Gasket	1
68882	Clip	1
68884	Shutter-choke	1
68858	Diaphragm	1
68891	Plug-extension	1
68900	Line-oil pick-up	2
68908	Spring	1
A-69031	Lead-ground	1
68084	Bushing-nylon	1
68074	"O" Ring-shaft	1
A-68261	Filter-fuel	1

Part No.	Description	Qty.
68262-1	Filter-fuel	1
68383	Spring	1
69051	Bearing-needle	1
A-68456-A	Valve-check	1
68480	Spring-throttle	1
68496	Worm-gear	1
68704	Screw	2
68705	Washer-lock	2
68714	Lever-inlet	1
68717	Needle-inlet	1
68926	Gasket-screw	1
68928	Seat-fuel	1
68937	Connector	1
68011-B	Bracket	1
68061	Cover-clutch	1
68063-1	Plate-clutch	1
68118	Cap	2
68166-A	Valve-reed	4
68185	Bearing-roller	1
68249-A	Rod-throttle	1
68266-A	Spring-rewind	1
68340-BA	Arm-oiler	1
A-68348	Line-oil	1
A-68488	Line-oil	1
68316	Gasket	1
68317	Cover	1
A-68327	Lever	1
68341	Filter Element	1
68343-2	Body-oil pump	1
68363-A	Body-oil pump	1
68387	Screw	3
68389-A	Screw-idle adj	1
68390-A	Retainer	1
68391-B	Seat-reed	1
68400	Bushing-nylon	2
68405	Rotor-magneto	1
A-68438	Valve-check	1
68462-A	Tube	1
68482	Washer-thrust	2
68483	Washer-thrust	1
68590-J	Cap-muffler	1
68591-A	Baffle-muffler	1
A-68595-2	Body-muffler	1
A-68640-B	Spark Arrester	1
68847-1	Spark Plug	1
68864-A	Shield-outer	1
68866	Shield-inner	1
68904	Line-oil	1
68931	Pin-dowel	2
68933	Button	1
69043	Coil-ignition	1
67120	Condenser	1
68427	Clamp	1
61038	Retainer-bolt	1
68650	Core-coil	1
A-68831	Points-breaker	1
68638	Lead	1
68684-1	Cover	1
68680	Screw	1
68676	Screw	1
68877	Screw-idle adj.	1
68918	Valve-check	1
A-68739	Kit-bumper	1
68738	Clip	1
68761	Gasket	1
68738-1	Gasket-cyl.	1
68738-B	Gasket	1
68868-A	Screw-shoulder	3
68903	Cap-dust	1
68901	Screw-coil core	4
68049-A	Lock	1
68090	Screw-ground	1
68108-A	Screw-cam	1
68106	Bearing-roller	1
68188	Block-inner	1
A-68288	Filter-oil	3
68400	Bushing	1
A-68481	Screen	1
68443	Bushing	1
A-68446	Pulley	1
A-68506-B	Housing-fan	1
68568	Shoe-clutch	3
A-68831	Bearing-needle	1
A-68918	Shield-sawdust	1
68942	Ring	3
68689	Grommet	1
68689-1	Guard-chain	1
68133	"O" Ring	1
68163	Cap	1
68164	Gasket	1
A-68863-A	Cap-fuel	1
A-68864-A	Cap-oil	1
68867	Grommet	1
68689	Gasket	1
A-68805	Valve-check	1
68609	Mount-shock	1
68613-1	Clamp-oil line	1

Part No.	Description	Qty.
A-68615	Valve-check	1
68613	Grommet	2
68618	Grommet	2
68620	Screw-shoulder	2
68321	Screw-shoulder	2
68649	Spacer-handle bar	1
68587-1	Clamp-fuel line	1
68408	Plate	1
68308	Plate-handle bar	1
68007-B	Bracket	1
68607-B	Bracket	1
68888-1	Plate-lever	1
68890	Lever	1
68893	Baffle-muffler	1
68860-1	Clamp-oil line	1
A-68882	Line-oil	1
68698	Connector	1
68696	Fitting-tube	1
A-68708	Line-oil	1
68714	Spring	1
68719	Pin-throttle latch	1
68728-2	Spider-clutch	1
A-68732	Sprocket & Drum	1
A-68733	Sprocket & Drum	1
A-68751	Sprocket & Drum	1
A-68758	Sprocket & Drum	1
68765	Trigger-throttle	1
68768	Rope-recoil	1
68798	Screw-oval	1
68799	Shaft-choke	1
A-68801	Valve-governor	1
A-68824-2	Handle Bar	1
68841-1	Clamp-lever	1
68842	Pin-throttle latch	1
68840	Bushing	1
68842	Spring-clutch	2
A-68860-1	Handle Bar	1
68878	Bushing	1
A-68884	Sprocket & Drum	1
A-68885	Sprocket & Drum	1
A-68886	Sprocket & Drum	1
A-68887	Sprocket & Drum	1
68888	Plug-accordion	2
A-68884	Kit-handle bar	1
A-68900	Handle Bar	1
A-68902	Kit-handle bar	1
A-68909	Drum & Hub	1
A-68910	Drum & Hub	1
A-69101	Deflector	1
69151-2	Cover	1
69159-J	Cover-drivecase	1
67169	Bolt-guide bar	3
67156	Gasket-fuel tank	1
67160	Plate-inner	1
67161	Plate-outer	1
67162	Module-ignition	1
67163	Coil-core	1
67164	Coil-transformer	1
67165	Rotor-magneto	1
67168	Lead-hi tension	1
67167	Lead-transformer	1
67168	Crankshaft	1
67188-1	Crankshaft	1
67177	Bushing	1
67181	Stud	10
67281	Washer-copper	2
67408	Ring-air flow	1
67441	Spring-clutch	2
A-67469-1	Manifold-intake	1
67540	Gasket-carb.	1
67539	"O" Ring	1
67588-1A	Pin	1
A-67818	Plate-back	1
A-67826-3	Handle Bar	1
A-67839	Nut	1
67848-B	Bracket	1
67848-3	Trigger-throttle	1
67869	Rod-throttle	1
67860-2	Bracket	1
67861-1	Pin-clevis	3
A-67880-1B	Handle Bar	1
67883	Pin-dowel	2
67756	Bushing	1
67866	Gasket-oil	1
67898	Mount	4
67876	Kit-repair	1
67875-1	Washer-tab lock	1
A-67897-C	Carburetor-HS921	1
67898-1	Shoe-clutch	6
A-67882-1	Piston & Pin	1
67904	Shutter-throttle	1
A-67906	Shaft-throttle	1
A-68003	Rod-connecting	1
68010	Washer-thrust	8
A-68023	Crankcase & Tank	1
A-68023-B	Handle-throttle	1
A-68028	Valve	1

Part No.	Description	Qty.
A-68027	Plate-magneto brick	1
A-68033	Piston & Pin	1
68046	Grommet	1
A-68057-A	Bipe-isolation mount	1
68078-1	Guard-chain	7
A-68079	Kit-W Coast Conversion	
68118	Label-chain	1
DM 68610	Sprocket	1
68249	Piston Ring	2
A-68250	Connector-handle bar	1
A-68251-A	Carburetor-HS 103B	1
A-68263	Pump-automatic oil	1
68264	Valve-check	1
A-68284	Cylinder-2" bore	1
68287	Plug-screw	1
68297	Lever-choke	1
A-68348	Rod-choke	1
68463	Line-fuel	1
68750	Retainer	1
68751	Retainer	1
A-68762-2	Handle bar-flush	1
68763	Spacer-handle bar	1
68765-B	Bracket-handle bar	1
68766-1	Bracket-handle bar	1
68767	Grip-throttle handle	1
68768	Grip	1
A-68769	Kit-spoked bumper	1
A-68806	Cover-throttle handle	1
A-68845	Crankcase & Tank	1
A-68864	Carburetor Chamber	1
A-68865	Cylinder-2-1/16" bore	1
68874	Stack-muffler	3
*68898-1	Spacer-handle bar	1
*A-68898-1	Handle Bar-full wrap	1
A-68911-1	Clip-muffler	1
A-68912-1	Cylinder	1
72084-A1	Nut	1
72084-A	Plate	1
73075	Spring-adj needle	2
73084	Spring-choke friction	1
74066	Gasket	1
74380	"O" Ring-plunger	1
75078	Key-woodruff	1
76413	Spring-clip cover	1
78411	Screw-contact plate	1
PAGLINO PARTS		
80023-B	8-32 x 5/8	1
80048	1/4-20 x 5/8	4
80063	1/4-20 x 3/4	2
80448	8-32 x 3/4	3
80266	4-40 x 3/16	3
80375	8-32 x 3/8	4
80351-1	10-32 x 1/2	8
80620	1/4-20 x 1	1
*80580	8-32 x 1/2	8
80669	8-32 x 7/8	2
*80671	8-32 x 3/4	12
80681	4-40 x 1/4	5
80805	8-32 x 5/16	1
80848	10-32 x 1/2	1
-80879	12-24 x 3/8	4
*80805	8-32 x 3/16	2
80893	12-24 x 1/2	1
80867	12-24 x 3/4	2
80891	10-24 x 5/8	1
80918	4-40 x 1/4	2
*80954	1/4-20 x 1-1/8	2
80976	12-24 x 5/8	4
81053	8-32 x 1/2	2
81068	8-32 x 1/4	1
—81068-A	Nut-1/4-28	4
81068	Nut-12-24	2
81089-B	Nut-3/8-16	4
81108	Nut-1/4-20	1
**81108-2	Nut-hex, 10-32	3
81134	Nut-hex, 3/8-24	1
-81136	Nut-lock, 8-32	12
81163	Nut-3/8-24	1
**81170	Nut-hex, 5/16-18	2
81146	8-32 x 5/8	5
81147	8-32 x 1-3/4	1
81156	8-32 x 2-3/16	6
81178	8-32 x 3/4	7
81179	10-32 x 1-7/8	2
81180	12-24 x 1/2	6
81188	8-32 x 1-1/4	3
83008-1	Washer-lock, #4	8
83008	Washer-lock, 1/4	6
83042	Washer-lock, #8	7
83024	Washer-lock, #6	4
83048	Washer- lock, #10	3
83008	Washer-lock, #12	2
83102	Washer-lock, 3/8	1
84010-1	Washer-3/8	2
84009	Washer-5/16	2
—86317	Pin-cotter	8
—86324	Pin-cotter	1
86388	Pin-cotter	1

* Denotes new parts

HOMELITE®

PRINTED IN U.S.A.

A Textron DIVISION ASHEVILLE, N.C. 28805

E 1178 TX